Is Your Unitary Low Dimensional?

Thomas Chen Shivam Nadimpalli Henry Yuen

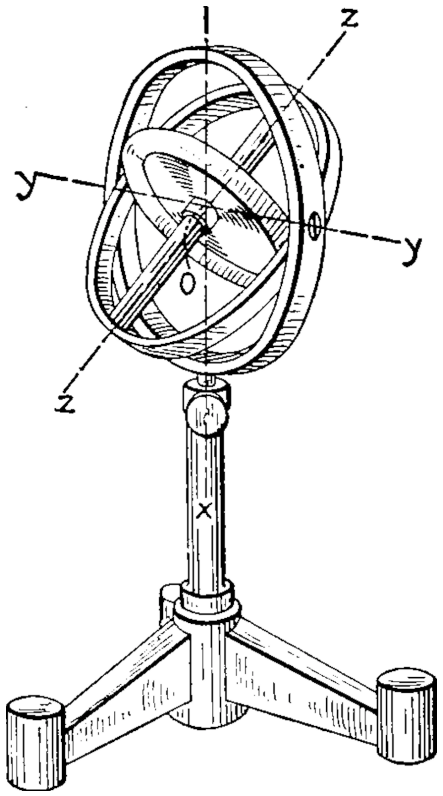

Is Your Unitary Low Dimensional?

Thomas Chen Shivam Nadimpalli Henry Yuen

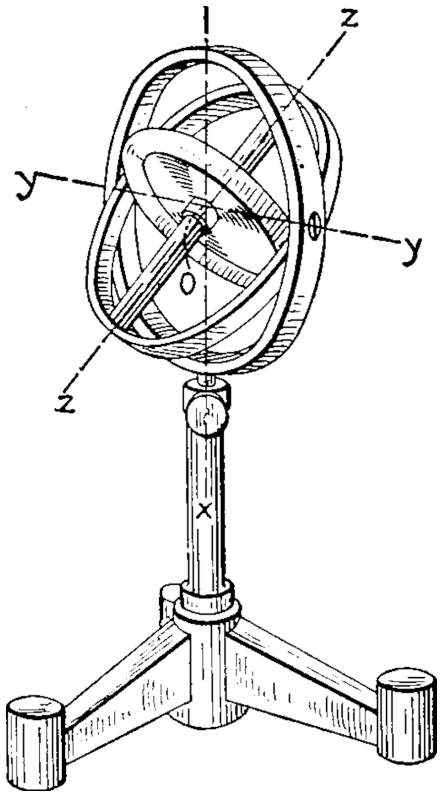

A Low-Dimensional Unitary?

Informally, if unitary U acts non-trivially on only k of the n qubits...

$$U = \begin{bmatrix} \boxed{V} & 0 & 0 & 0 \\ 0 & \boxed{V} & 0 & 0 \\ 0 & 0 & \ddots & 0 \\ 0 & 0 & 0 & \boxed{V} \end{bmatrix}_{2^n \times 2^n}$$

Definition: Unitary U acting on n qubits is a <u>k-junta</u> if $U = V \otimes I$ for some $2^k \times 2^k$ unitary V.

A Natural Question

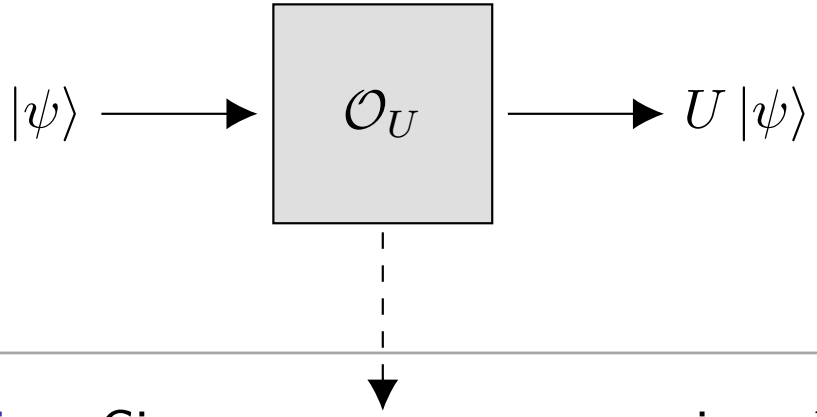

Question: Given query access to a unitary U on n qubits and $k > 0$, is U a k-junta?

- Goal: Minimize # of queries to $\mathcal{O}_U$

A Natural Question

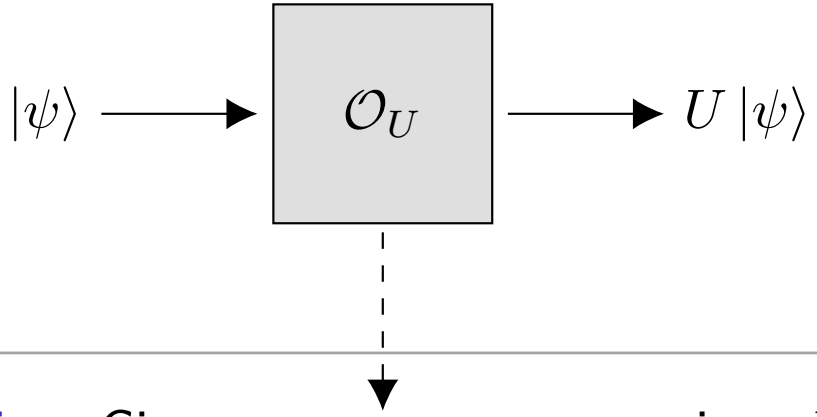

Question: Given query access to a unitary U on n qubits and $k > 0$, is U a k-junta?

- Goal: Minimize # of queries to $\mathcal{O}_U$
- Intuitively feels hard to do without dependence on n...

Relaxing The Question

(Old) Question: Given query access to a unitary U on n qubits and $k > 0$, is U a k-junta?

Relax

(New) Question: Given query access to a unitary U on n qubits and $k > 0$, decide with high probability

- if U is a k-junta; or
- if U is far from every k-junta? (Hilbert-Schmidt distance, up to phase)

Property Testing: It's Like Eggs, Only Harder!

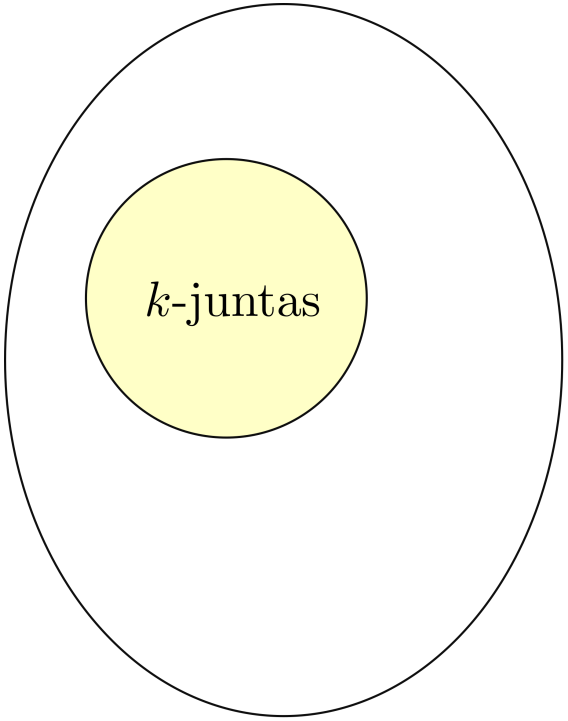

Old Question

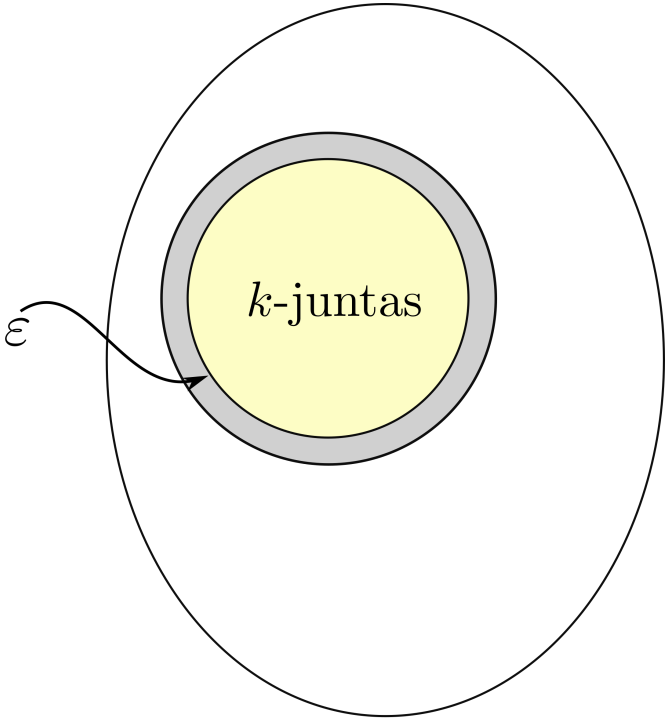

New Question

The Question We Consider

(New) Question: Given query access to a unitary U on n qubits and $k > 0$, decide with high probability

- if U is a k-junta; or
- if U is far from every k-junta?

Important Special Case: Boolean $f : \{0,1\}^n \to \{0,1\}$

Prior Work

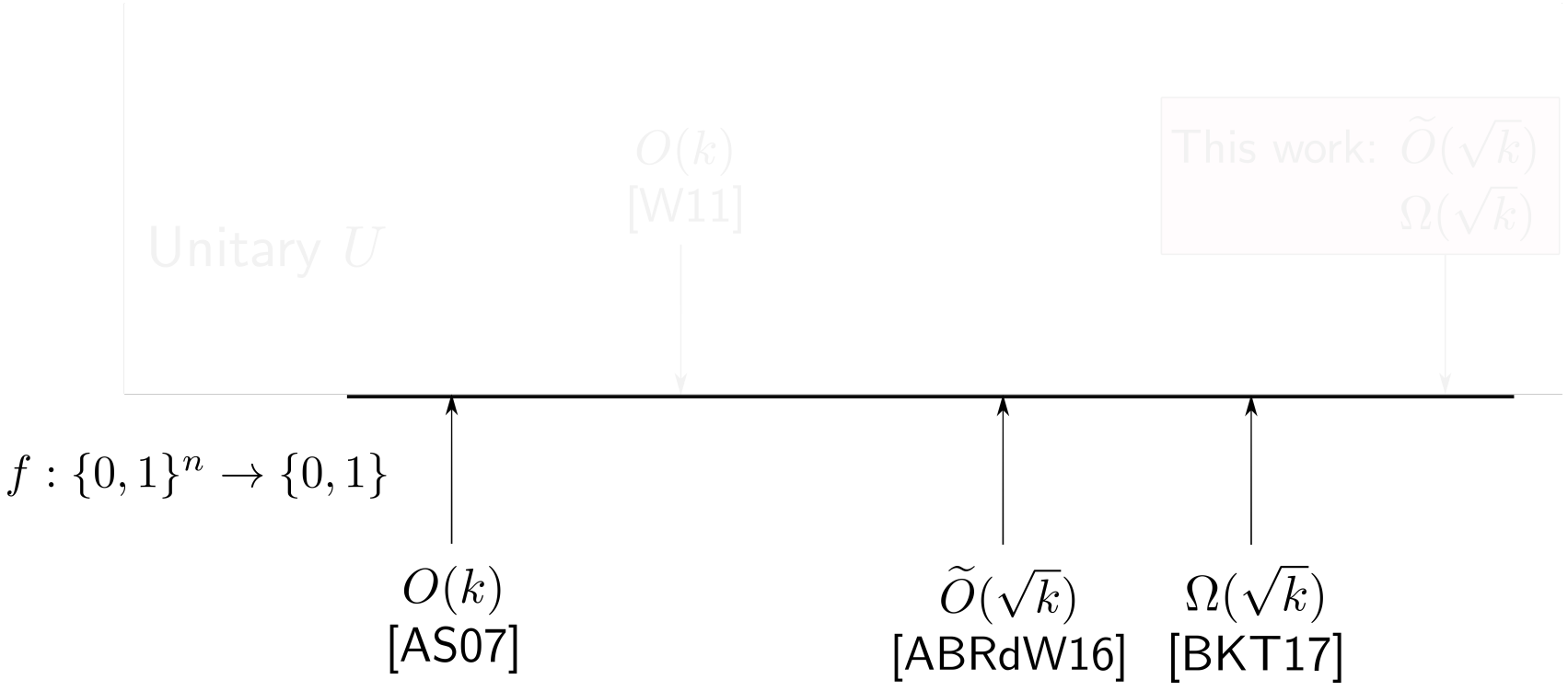
$O(k)$
[W11]
This work: $\widetilde{O}(\sqrt{k})$
$\Omega(\sqrt{k})$
Unitary U
$f : \{0,1\}^n \to \{0,1\}$
$O(k)$
[AS07]
$\widetilde{O}(\sqrt{k})$
[ABRdW16]
$\Omega(\sqrt{k})$
[BKT17]

Prior Work

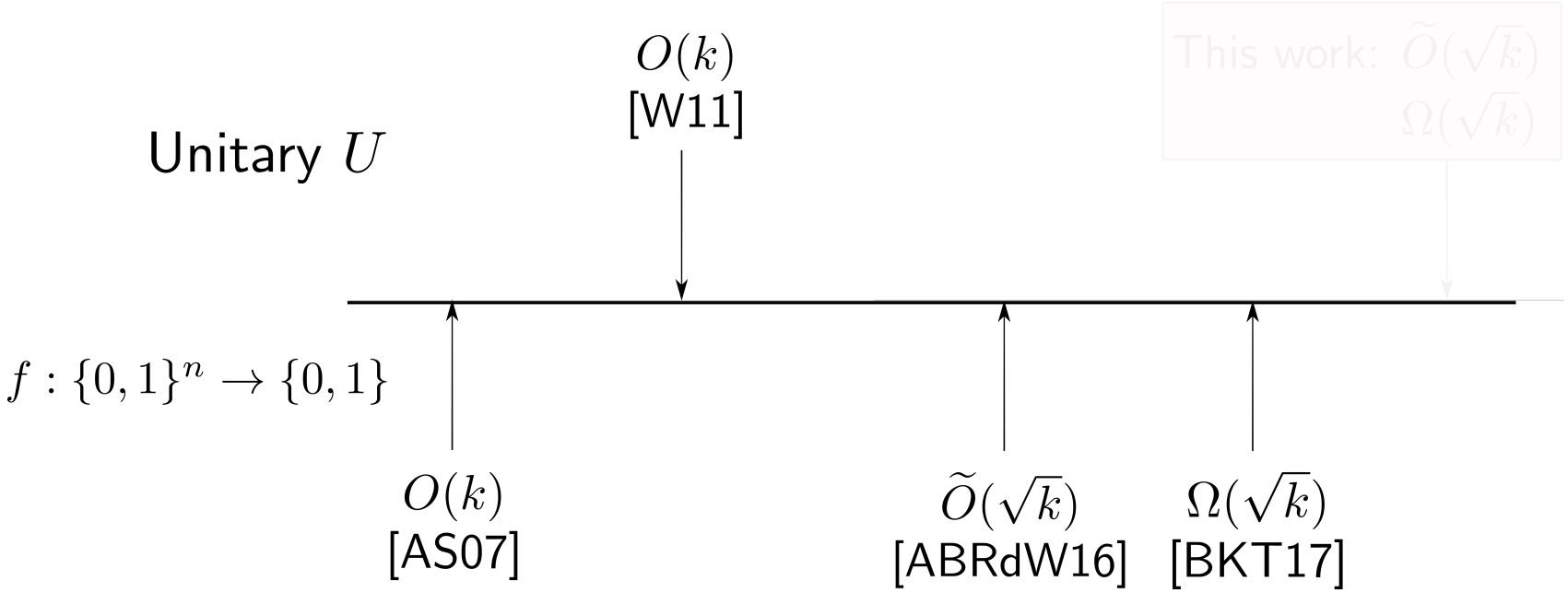
This work: $\widetilde{O}(\sqrt{k})$
$\Omega(\sqrt{k})$
$O(k)$
[W11]
Unitary U
$f : \{0,1\}^n \to \{0,1\}$
$O(k)$
[AS07]
$\widetilde{O}(\sqrt{k})$
[ABRdW16]
$\Omega(\sqrt{k})$
[BKT17]

Prior Work

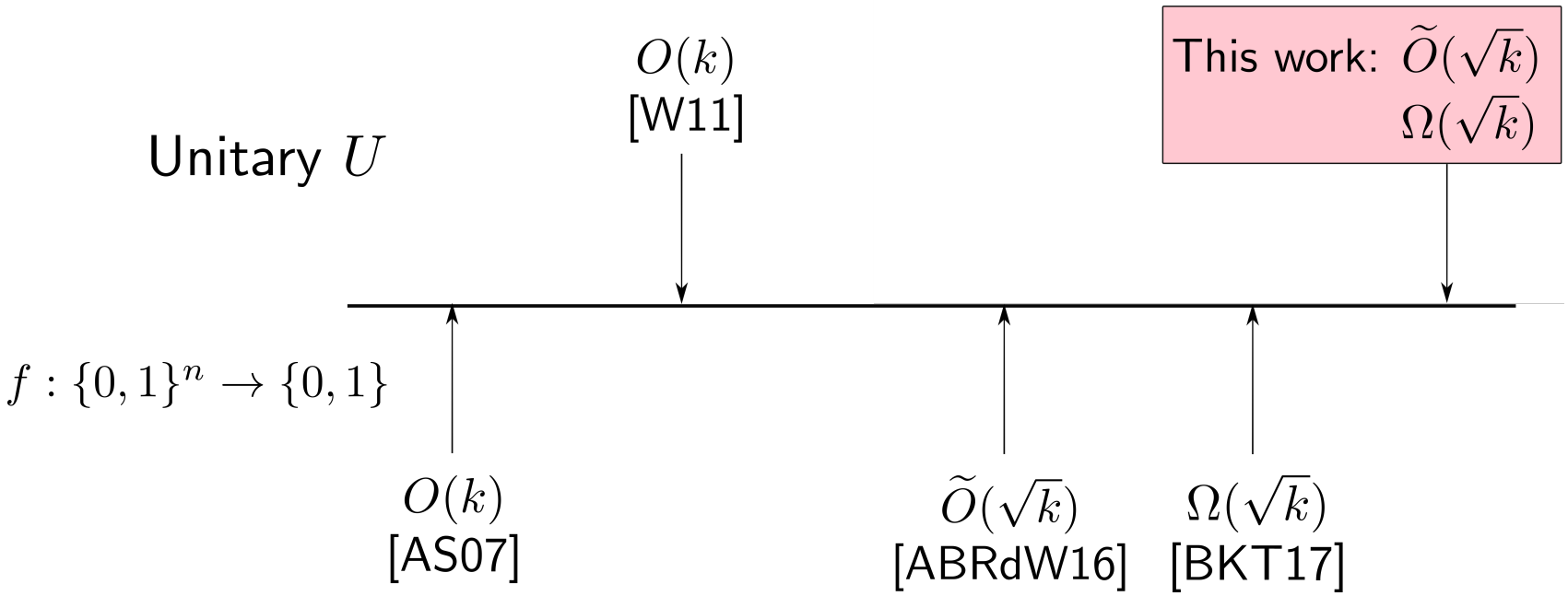
Unitary U
$O(k)$
[W11]
This work: $\widetilde{O}(\sqrt{k})$
$\Omega(\sqrt{k})$
$f : \{0,1\}^n \to \{0,1\}$
$O(k)$
[AS07]
$\widetilde{O}(\sqrt{k})$
[ABRdW16]
$\Omega(\sqrt{k})$
[BKT17]

Our Main Result

Theorem: You can decide (w.h.p.) if a unitary is a k-junta or "far" from a k-junta with $\widetilde{O}(\sqrt{k})$ queries. Furthermore, this is essentially tight: testing if a unitary is a k-junta requires $\Omega(\sqrt{k})$ queries.

The Upper Bound

Recall from HW 1 that any $2^n \times 2^n$ matrix can be written as

$$U = \sum_{x \in \{I,X,Y,Z\}^n} \widehat{U}(x)\sigma_x.$$

Key Quantity: The <u>influence</u> of a qubit j on U is defined as

$$\mathbf{Inf}_j[U] = \sum_{x : x_j \neq I} |\widehat{U}(x)|^2.$$

- Informally captures how "non-trivially" U acts on the qubit j.
- Naturally extends to $\mathbf{Inf}_S[U]$ for $S \subseteq U$.

The Upper Bound

Key Lemma: Can determine with $O(1/\sqrt{\delta})$ queries to U and $U^\dagger$ if $\mathbf{Inf}_S[U] \geq \delta$.

The Upper Bound

Key Lemma: Can determine with $O(1/\sqrt{\delta})$ queries to U and $U^\dagger$ if $\mathbf{Inf}_S[U] \geq \delta$.

$+$

[ABRdW16]: Given unknown $A \subseteq [n]$ and access to

$$\mathrm{Intersects}_A(S) := \begin{cases} 1 & A \cap S \neq \emptyset \\ 0 & \text{otherwise} \end{cases},$$

can decide if $|A| \leq k$ or $|A| \geq k + d$ with $O(\sqrt{1 + k/d})$ queries.

The Upper Bound

Key Lemma: Can determine with $O(1/\sqrt{\delta})$ queries to U and $U^\dagger$ if $\mathbf{Inf}_S[U] \geq \delta$.

$$+$$

[ABRdW16]: Given unknown $A \subseteq [n]$ and access to

$$\mathrm{Intersects}_A(S) := \begin{cases} 1 & A \cap S \neq \emptyset \\ 0 & \text{otherwise} \end{cases},$$

can decide if $|A| \leq k$ or $|A| \geq k + d$ with $O(\sqrt{1 + k/d})$ queries.

$= O\left(\frac{\sqrt{k \log k} \log k}{\varepsilon}\right)$ queries for testing quantum k-juntas

The Lower Bound

[BKT17]: Testing if $f : \{0,1\}^n \to \{0,1\}$ is a k-junta requires $\Omega(\sqrt{k})$ queries.

- Encode $f : \{0,1\}^n \to \{0,1\}$ as $U_f := \mathrm{diag}(-1^{f(x)})$.
- Essentially a reduction from [BKT17], but needs new structural result for unitary k-juntas.

Other Contributions

Learning unitary k-juntas:

- Upper bound via tomography
- A lower bound via communication complexity

Questions?

Many thanks to

- Rocco Servedio and Xi Chen for helpful discussions, and
- All of you for listening ☺