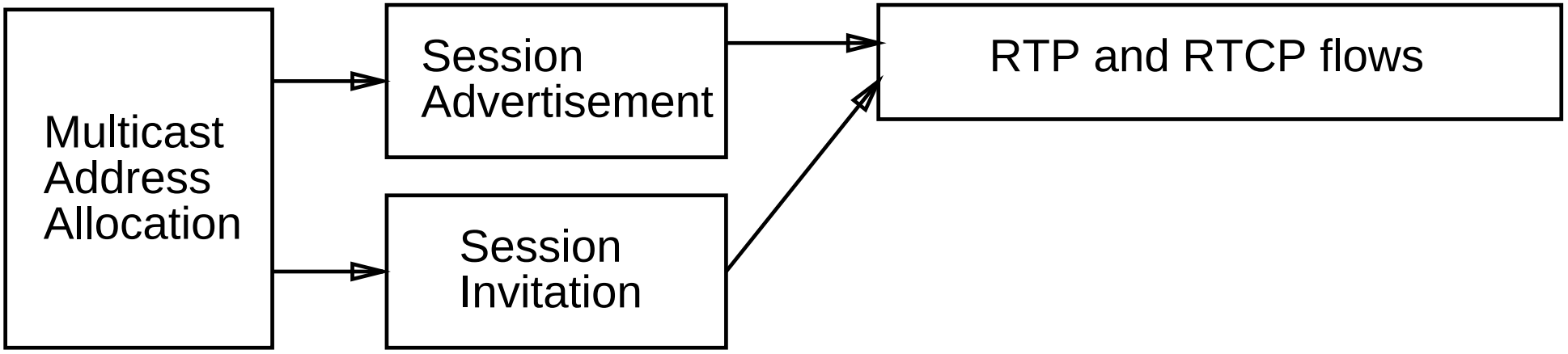

Lightweight Session Lifecycle

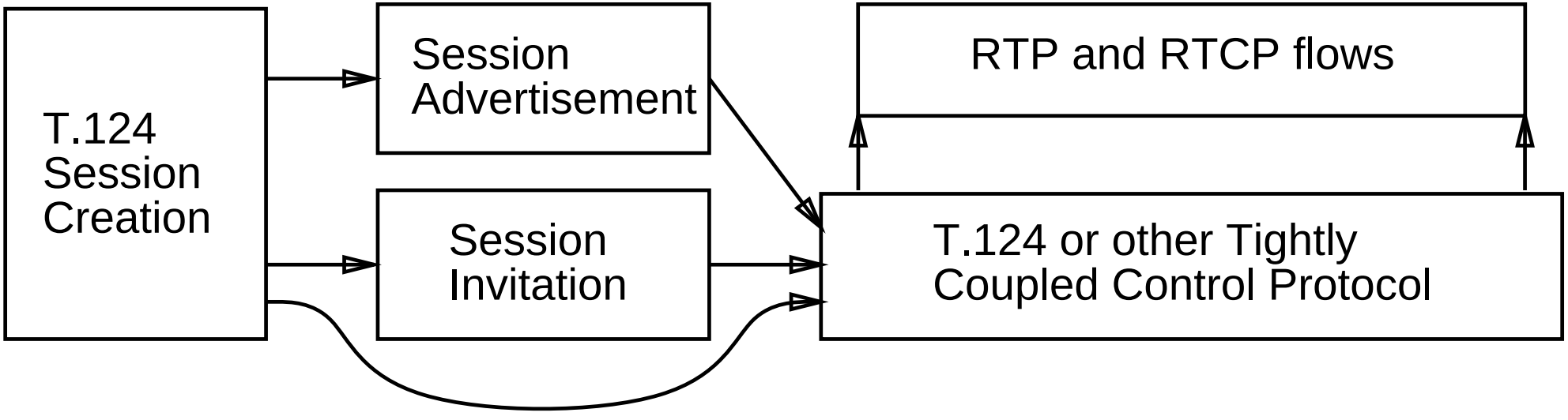

Tightly Coupled Session Lifecycle