The World According to Internet

GMD fokus

Some Terminology

internet: collection of packet switching networks interconnected by routers

(the) Internet: "public" interconnection of networks

end system = host: computer that is attached to the network ↔ router; usually *one* network interface

router = gateway = intermediate system: routes packets, several interfaces

subnetwork: part of an internet (e.g., single Ethernet)

firewall: router placed between an organization's internal internet and a connection to the external Internet, restricting packet flows to provide security.

GMD fokus

Protocols

- rules by which active network elements communicate with each other is a *protocol*
- protocols = "algorithms + data structures"
  - formats of messages exchanged
  - actions taken on receipt of messages
  - how to handle errors
- hardware/operating-system independent
- real-life examples:
  - Robert's rules for meetings
  - conversational rules (interrupts, request for retransmission, …)

What Do Protocols Do for a Living?

error control: make channel more reliable ➠ retransmission

resequencing: reorder out-of-sequence messages

flow control: avoid flooding slower receiver

congestion control: avoid flooding slower network

fragmentation: divide large message into smaller chunks to fit lower layer

multiplexing: combine several higher-layer sessions into one "channel"

addressing/naming: manage identifiers

compression: reduce data rate

privacy, authentication: even if somebody else is listening

resource allocation: bandwidth, buffers among contenders

Protocol Layering

send side layer N takes protocol data (PDU) from layer $N+1$, adds header, and passed to $N-1$

receive side layer N takes PDU from $N-1$, strips N headers, processes, and passes rest to $N+1$

Protocol Layering

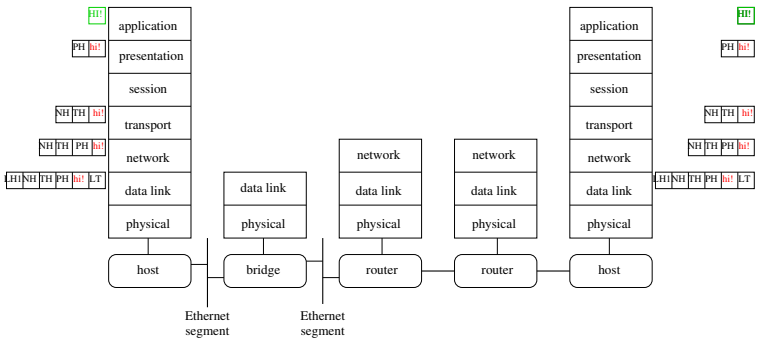

TH (transport header): sequence numbers, error detection, timestamp information ➠ end-to-end

NH (network header): source and destination address, hop counts

LHn (link header): error detection, hop-by-hop error control

Routers and Bridges

host: all layers

router: modifies data link headers/address, may touch network headers (IP options!)

bridge: may modify data link header

repeater: physical layer

➠ IP packet maintains same source and destination addresses end-to-end, but gets many different link headers/trailers and addresses

Layering Considered Harmful?

- need layers to manage complexity ➠ don't want to reinvent Ethernet-specific protocol for each application
- common functionality → "ideal" network

but:

- layer N may duplicate lower layer functionality (error recovery)
- different layers may need same information
- layer N may need to peek into layer $N - 2$ (e.g., fragmentation)
- implementation issues: avoid copying

Internet View of the World

"anything over IP, IP over anything"

- subnetwork: ATM, Ethernet, ISDN (with PPP, SLIP)
- network layer: IP, IPng, (CLNP?)
- transport: UDP, TCP, …
- application: http, ftp, telnet, RTP, …
- control: RSVP
- management: SNMP
- directory: DNS

➠ no session, presentation; also: OSI, AppleTalk over IP

GMD fokus

Subnetwork Technologies

Some examples:

technology	bandwidth	WAN, LAN
ATM	25 Mb/s …2.4 Gb/s	WAN
leased line	56 kb/s, 1.5 Mb/s (T1), 2.0 Mb/s (E1)	WAN
satellite	2.4 kb/s …Mb/s	WAN
Ethernet	10 Mb/s, 100 Mb/s	LAN
Tokenring	4 Mb/s, 10 Mb/s	LAN
ISDN	64 kb/s	LAN
POTS modem	2.4 …28.8 kb/s	LAN

GMD fokus

The Internet Protocol Zoo

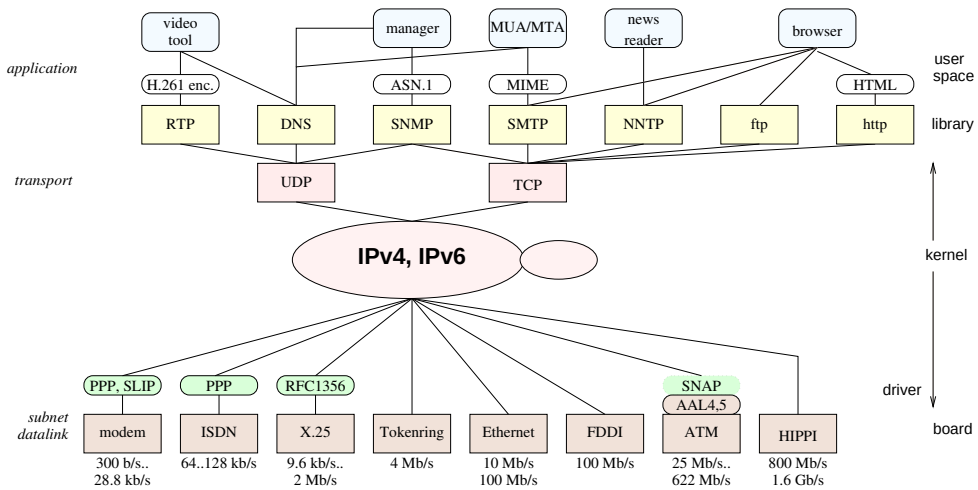

Refresher: Ethernet

- multiple access network
- 10 Mb/s "raw" speed (new: 100 Mb/s *Fast Ethernet*)
- media: coaxial cable, fiber, UTP-5 (unshielded twisted pair)
- cocktail party protocol: listen, transmit, back off

```
L = 1
start:
  if (nobody else transmitting)
    transmit
    if (collision detected)
      stop transmission immediately
      L *= 2
      wait random period of time (0, L) minislots; goto start
  else
    wait random period of time; goto start
```

Ethernet Packet

preamble: 7 bytes for clock synchronization

length/frame type: 2 bytes, < 1500; or IPv4: 0x0800; ARP: 0x0806

7	1	6	6	2	46..1500		4 octets
preamble 7 x 10101010	start frame del. 10101011	destination MAC address	source MAC address	length (<1500) type (IP, ARP)	data	pad	CRC (checksum)

Names and Addresses

Names, Addresses, Routes

Shoch (1979):

Name identifies what you want,

Address identifies where it is,

Route identifies a way to get there.

Saltzer (1982):

Service and users: time of day, routing, …

Nodes: end systems and routers

Network attachment point: ≥ 1 per node ➠ multihomed host vs. router

Paths: traversal of nodes and links

binding = (temporary) equivalence of two names

GMD fokus

Internet Names and Addresses

	example	organization
MAC address	8:0:20:72:93:18	flat, permanent
IP address	132.151.1.35	topological (mostly)
Host name	www.ietf.org	hierarchical

host name $\overset{\mathrm{DNS,many-to-many}}{\longrightarrow}$ IP address $\overset{\mathrm{ARP,1-to-1}}{\longrightarrow}$ MAC address

GMD fokus

The Internet Domain Name System

We'll talk about *name resolution* later…

organization administering host

organization administering subnames to left

host name
(has IP address)

organization type or country

lupus.fokus.gmd.de

Anywhere from two to ∞ parts

The Internet Domain Name System

2 letters: countries
3 letters: independent of geography (except edu, gov, mil)

domain	usage	example
com	business (global)	research.att.com
edu	U.S. higher education	cs.umass.edu
gov	U.S. non-military gov't	whitehouse.gov
mil	U.S. military	arpa.mil
org	non-profit organization (global)	www.ietf.org
net	network provider	nis.nsf.net
us	U.S. geographical	ietf.cnri.reston.va.us
de	Germany	fokus.gmd.de
uk	United Kingdom	cs.ucl.ac.uk

IP Addresses

Each Internet host has one or more globally unique 32-bit IP addresses, consisting of a network number and a host number:

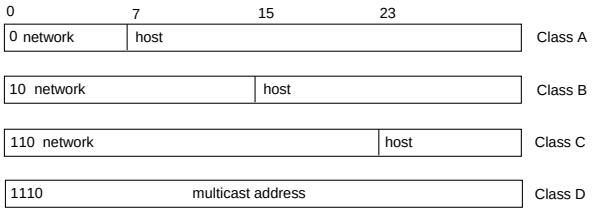

- two-level hierarch → three-level (later)
- an IP address identifies an *interface*, not a host!
- a host may have two or more addresses. Why?
- net 10: reserved for internal use

IP Addresses

- dotted decimal notation: 4 decimal integers, each specifying one byte of IP address:

host name	lupus.fokus.gmd.de
32-bit address	1100 0000 0010 0011 1001 0101 0011 0100
dotted decimal	192.35.149.52

- loopback: 127.0.0.1 (packets never appear on network)
- own network (broadcast): hostid = 0; own host: netid = 0
- directed broadcast: hostid = all ones
- local broadcast: 255.255.255.255

IP Address Classes

class	first	hosts per network	nets	used (1.96)
Class A	< 128	16 mio.	128	92
Class B	128 . . . 191	65534	16384	5655
Class C	192 . . . 223	254	2 mio.	87924
Class D	224 . . . 239		268 mio.	dynamic
Class E	240 . . . 255		134 mio.	reserved

Example: ifconfig

```
ifconfig -a
le0:  flags=863<UP,BROADCAST,NOTRAILERS,RUNNING>
        inet 192.35.149.117 netmask ffffff00 broadcast 192.35.149.0
fa0:  flags=863<UP,BROADCAST,NOTRAILERS,RUNNING>
        inet 194.94.246.72 netmask ffffff00 broadcast 194.94.246.0
qaa0: flags=61<UP,NOTRAILERS,RUNNING>
        inet 193.175.134.117 netmask ffffff00
qaa1: flags=61<UP,NOTRAILERS,RUNNING>
        inet 129.26.216.231 netmask ffff0000
qaa2: flags=60<NOTRAILERS,RUNNING>
qaa3: flags=60<NOTRAILERS,RUNNING>
lo0:  flags=849<UP,LOOPBACK,RUNNING>
        inet 127.0.0.1 netmask ff000000
```

Problems with IP Addresses

- if a host moves from one network to another, its IP address changes
- currently, mostly assigned without regards to topology → too many networks ➠ CIDR
- limited space ➠ IPv6
- class thresholds: class C net grows beyond 254 hosts
- hard to change: hidden in lots of places
- multihomed host: path taken to host depends on destination address

CIDR: Classless Interdomain Routing

- problem: too many networks ➠ routing table explosion
- problem: class C too small, class B too big (and scarce)
- discard class boundaries → supernetting
- ISP assigns a contiguous group of 2^n class C blocks
- "longest match routing" on masked address; e.g. 192.175.132.0/22

address/mask	next hop
192.175.132.0/22	1
192.175.133.0/23	2
192.175.128.0/17	3

- e.g.,: all sites in Europe common prefix ➠ only single entry in most U.S. routers

Subnetting

- large organizations: multiple LANs with single IP network address
- subdivide "host" part of network address ➠ subnetting

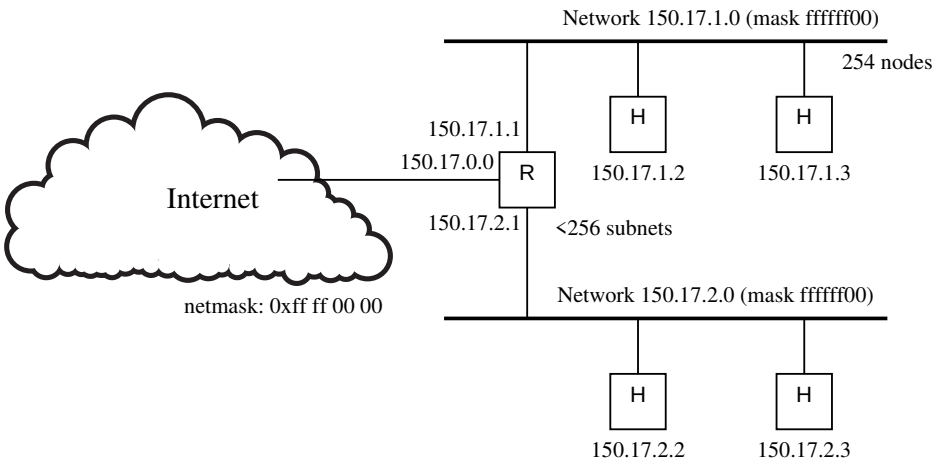

IP Forwarding

```
get destination IP address D
if network(D) == directly attached network {
  ARP: D -> MAC address
  put in link layer frame
  forward
else
  foreach entry in routing table {
    if (D & subnet mask) == network(entry) {
      get next hop address N
      ARP: N -> MAC address
      put in link layer frame
      forward
    }
  }
}
```

➠ IP source/destination remains same, MAC changes

IP Forwarding

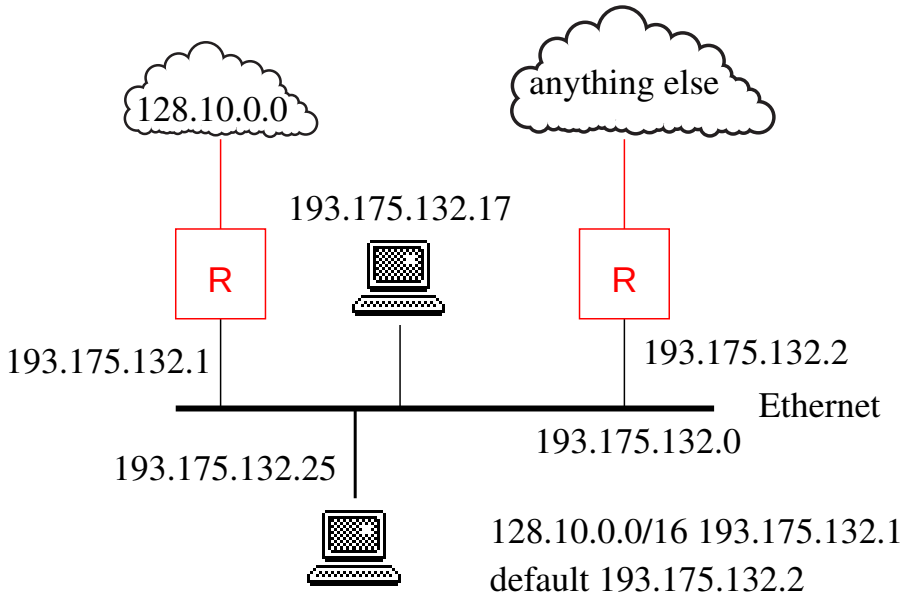

GMD Fokus Network

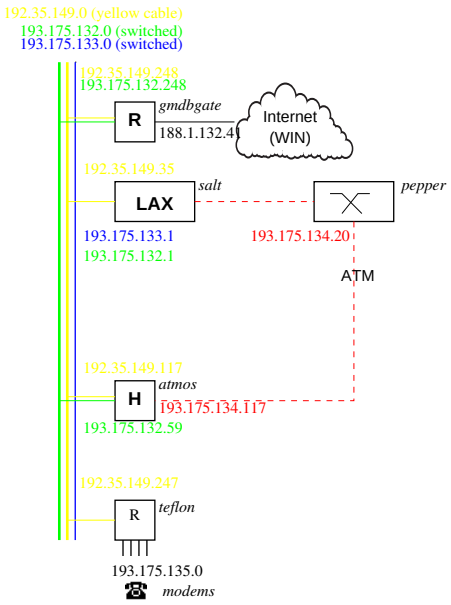

The Internet Protocol

GMD fokus

IPv4 Service Model

datagram: each packet is independent of all others

best effort: packet may arrive *or not* after some time

GMD fokus

IPv4 Header

RFC 791

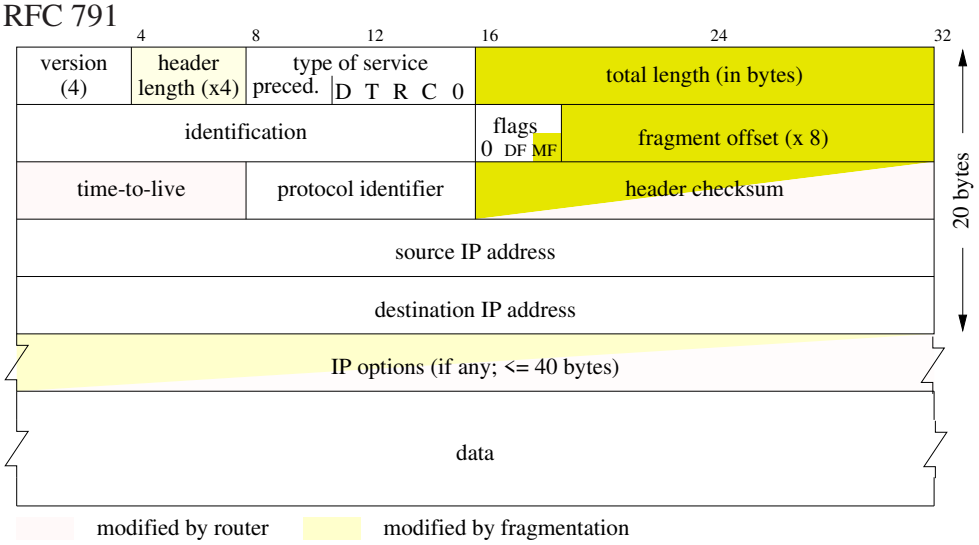

IPv4

version: always 4

TOS (type of service): precedence (3 bits) and "minimize delay", "maximize throughput", "maximize reliability", "minimize cost" bits ➠ rarely used

identifier: identifier, different for each packet from host

TTL: time to live field; initialized to 64; decremented at each router ➠ drop if TTL = 0 (prevent loops!)

protocol: next higher protocol (TCP: 6, UDP: 17)

header checksum: add together 16-bit words using one's complement ➠ optimized for software

IP Fragmentation and Reassembly

data link protocol may limit packets $< 65,536$ bytes ➠ transport layer packet may be too big to send in single IP packet

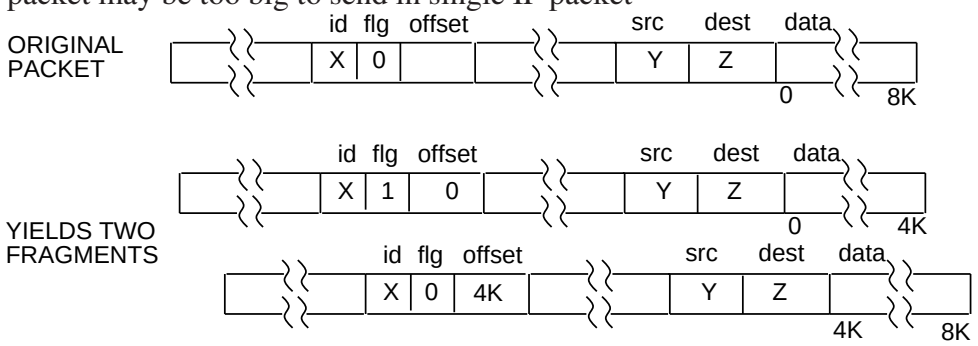

IP Fragmentation and Reassembly

➠ split TPDU into *fragments*

- each fragment becomes its own IP packet (routers don't care)
- each fragment has same identifier, source, destination address
- fragment offset field gives offset of data from start of original packet
- *more fragments* (MF) flag of 0 if last (or only) fragment of packet
- fragments reassembled only at final destination
- routers must handle at least 576 bytes
- *do not fragment* bit prevents fragmentation ➠ drop + error message
- avoid multiple fragmentation (1500 → 620) ➠ MTU discovery

IP Options

Extend functionality of IP without carrying useless information:

- security and handling restrictions for military
- determine route (source route)
- record route
- record route and timestamps

(rarely used $\leftrightarrow$ not all routers support them)

GMD fokus

IP Record Route Option

- source creates empty list of ≤ 9 IP addresses
- option: length, pointer, list of IP addresses
- routers note outgoing interface in list
- …and bump pointer

GMD fokus

IP Source Route Option

- source determines path taken by packet ($\leq$ 9 hops)
- *loose*: any number of hops in between
- *strict*: every hop; if not directly connected, discard
- same format as record route option
- router overwrites with address of outgoing interface
- must be copied to fragments
- destination should reverse route for return packets
- not too popular ➠ router performance $\downarrow$

GMD fokus

ICMP

- used to communicate network-level error conditions and info to IP/TCP/UDP entities or user processes
- often considered part of the IP layer, but
  - IP demultiplexes up to ICMP using IP protocol field
  - ICMP messages sent within IP datagram
- ICMP contents always contain IP header and first 8 bytes of IP contents that caused ICMP error message to be generated

20−byte standard IP header	8 bit ICMP type	8 bit ICMP code	16−bit checksum	contents of ICMP msg

GMD fokus

type	code	description
0	0	echo reply (to a ping)
3	0	destination network unreachable
3	1	destination host unreachable
3	2	destination protocol unreachable
3	3	destination port unreachable
3	4	fragmentation needed and DF set
3	6	destination network unknown
3	7	destination host unknown
3	…	other reasons
4	0	source quench (slow down)
5	1	redirect message to host
8	0	echo request (ping)
9	0	IS-ES router advertisement (new)
10	0	ES-IS router discovery (new)
11	0	time exceeded = TTL zero
12	0	IP header bad
17	0	address (subnet) mask request
18	0	address (subnet) mask reply

ping

- checks if host is reachable, alive
- uses ICMP echo request/reply
- copy packet data request → reply

```
ping -s gaia.cs.umass.edu
PING gaia.cs.umass.edu: 56 data bytes
64 bytes from gaia.cs.umass.edu (128.119.40.186): icmp_seq=0 time=276 ms
64 bytes from gaia.cs.umass.edu (128.119.40.186): icmp_seq=1 time=281 ms
64 bytes from gaia.cs.umass.edu (128.119.40.186): icmp_seq=2 time=276 ms
^C
----gaia.cs.umass.edu PING Statistics----
4 packets transmitted, 3 packets received, 25% packet loss
round-trip (ms)  min/avg/max = 276/277/281
```

traceroute

- allows to follow path taken by packet
- send UDP to unlikely port; 'time exceeded' and 'port unreachable' ICMP replies
- can use source route (-g), but often doesn't work

```
$ traceroute gaia.cs.umass.edu
 1  gmdbgate (192.35.149.248)  6 ms  2 ms  2 ms
 2  188.1.132.142 (188.1.132.142)  263 ms  178 ms  188 ms
 3  gmdisgate.gmd.de (192.54.35.68)  153 ms  187 ms  151 ms
 4  icm-bonn-1.gmd.de (192.76.246.17)  226 ms  207 ms  242 ms
 5  icm-dc-1-S2/6-512k.icp.net (192.157.65.209)  320 ms  315 ms  393 ms
 6  icm-mae-e-H1/0-T3.icp.net (198.67.131.9)  372 ms  297 ms  354 ms
 7  mae-east (192.41.177.180)  456 ms  537 ms  401 ms
 8  borderx2-hssi2-0.Washington.mci.net (204.70.74.117)  529 ms  385 ms  340 ms
 9  core-fddi-1.Washington.mci.net (204.70.3.1)  437 ms  554 ms  581 ms
10  core-hssi-3.NewYork.mci.net (204.70.1.6)  418 ms  547 ms  492 ms
11  core-hssi-3.Boston.mci.net (204.70.1.2)  453 ms  595 ms  724 ms
12  border1-fddi-0.Boston.mci.net (204.70.2.34)  789 ms  404 ms  354 ms
13  nearnet.Boston.mci.net (204.70.20.6)  393 ms  323 ms  346 ms
14  mit3-gw.near.net (192.233.33.10)  340 ms  465 ms  399 ms
15  umass1-gw.near.net (199.94.201.66)  557 ms  316 ms  369 ms
16  lgrc-gw.gw.umass.edu (192.80.83.1)  396 ms  309 ms  389 ms
17  cs-gw.cs.umass.edu (128.119.44.1)  276 ms  490 ms  307 ms
18  gaia.cs.umass.edu (128.119.40.186)  335 ms  317 ms  350 ms
```


ARP: IP address → MAC address

- for broadcast networks like Ethernet, token ring, …
- if MAC address unknown, send ARP request and hold on to packet
- ARP request → broadcast: sender IP, MAC; target IP, MAC
- *all* machines update their cache ➠ efficiency, allow change of interface
- ARP reply → requestor: reverse source/target; fill in source MAC
- directly on Ethernet, *not* IP!
- cache ARP replies; drop after 20 minutes

ARP example

```
rp -a
Net to Media Table
Device   IP Address                Mask       Flags   Phys Addr
------ -------------------- --------------- ----- ---------------
le0    hamlet               255.255.255.255       08:00:09:70:7d:16
le0    gaia                 255.255.255.255       08:00:20:20:07:03
le0    pern                 255.255.255.255       08:00:20:20:75:3c
le0    kite                 255.255.255.255       08:00:09:92:0d:d1
le0    condor               255.255.255.255       08:00:20:1c:95:ed
```


RARP: MAC → IP address

- determine IP address at boot for diskless workstations
- remember: MAC address is unique and permanent
- host broadcasts RARP request (with its own MAC address)
- RARP server responds with reply
- allows third-party queries
- want several servers for reliability

Proxy ARP

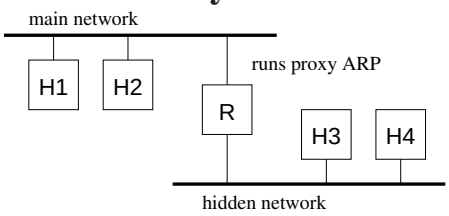

- extend network: router fronts for H3, H4
- router answers ARP requests for H3, H4 from H1, H2 with its *own* hardware address
- assumes trusting relationship
- only needs to be added to single router
- only works for broadcast networks