HW #5

ELEN E4710 - Intro to Network Engineering — Due 11/12/2003
Fall 2003 — Prof. Rubenstein

Homework must be turned in at the beginning of class on the due date indicated above. CVN students have one additional day. Late assignments will not be accepted.

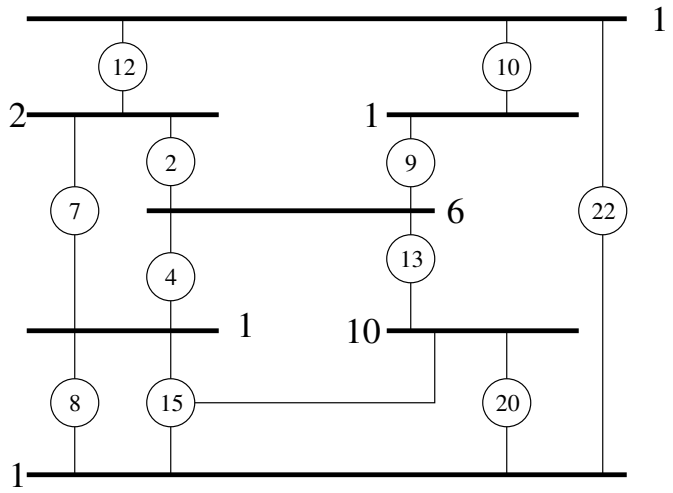

1. In the LAN above, switch IDs are indicated upon the switch, and wire weights, assigned by a network administrator, are depicted adjacent to the wire.

   (a) Perform the spanning tree algorithm to determine the interfaces (ports) of the switches that are turned on for forwarding.

   (b) Suppose the switch with ID 22 is removed. Redraw the spanning tree after this modification.

   (c) Suppose the switch with ID 2 is removed from the original configuration. Redraw the spanning tree now.

2. Draw the trie structure that maps addresses to the interface corresponding to the longest matching prefix in the table below:

prefix	interface
1	2
01	1
110	1
101	3
0110	2
1011	2

3. 3 flows, f_1, f_2, and f_3 all pass through the same router R. Packets from flows f_1 and f_2 arrive at R in bursts of 10 with a period of one second, packets from f_3 arrive at the router one at a time with a period of .1 seconds. Packets from all flows contain the the same number of bytes). Suppose packets from f_1 start arriving at R at time $t = 0$, flow f_2 at time $t = 1$, and flow f_3 at time $t = 2$. If each flow transmits a total of 100 packets, and the router processes a packet every 0.05 seconds, what are the completion times of the various flows when

   (a) R uses FIFO (FCFS) queueing?

   (b) R uses round robin?

   (c) R uses virtual clock?

   (d) R uses weighted fair queueing where the slack (i.e., the maximum reserve that a flow can build up) is 20 packets?