HW #8

ELEN E4710 - Intro to Network Engineering — Due 5/1/2003
Spring 2003 — Prof. Rubenstein

Homework must be turned in at the beginning of class on the due date indicated above. CVN students have one additional day. Late assignments will not be accepted.

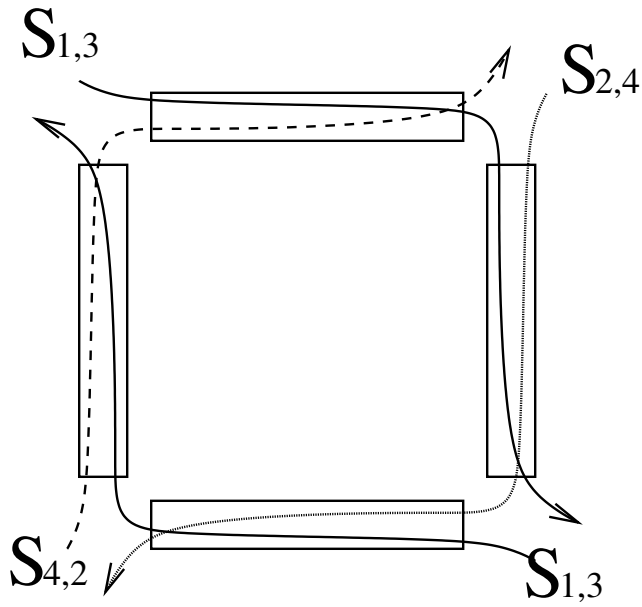

1. Consider the network pictured above where each link has capcity C, each session transmits into the network at rate ρ, and each session's transmissions traverse two links. In class, we showed how increasing the flow rate beyond $C/2$ led to congestion collapse.

   (a) How can priority queueing be used to prevent collapse where the priority mechanism does not know the capacity of the link (i.e., you cannot simply restrict the entry rate of the flow into the link to $C/2$)? (Hint: How should each link prioritize the session data that it carries so that flow is not "wasted" by passing through the first link and then being dropped at the second?)

   (b) Will round-robin queueing prevent collapse? Explain your answer.

   (c) Will fair queueing prevent collapse? Explain your answer.

2. A flow will traverse a set of routers $R_1, \cdots, R_n$ where router R_i will process its packets at (deterministic) rate λ_i and can queue up to b_i packets at a time without dropping any.

   (a) Assuming the flow has reserved access to the router resources (such that no other flow competes for the resources described above), what is the leaky bucket configuration (ρ, b) that the sender of th eflow should use (where ρ is the rate at which tokens enter the bucket and b is the maximum number of tokens the bucket can hold) to maximize the transmission rate such that a packet is never lost, i.e., none of the routers described above drop a packet?

   (b) Give an example of transmission sequence that leads to a packet loss when the leaky bucket is configured using (ρ', b'), where $\rho' = \rho$ and $b' > b$.

   (c) Give an example of transmission sequence that leads to a packet loss when the leaky bucket is configured using (ρ', b'), where $\rho' > \rho$ and $b' = b$.

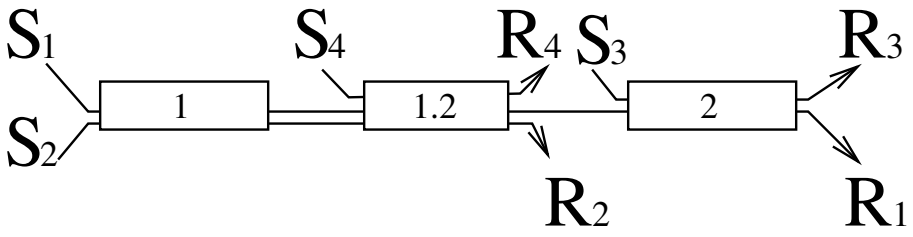

3. Consider the network shown above.

   (a) Explain why an allocation of rates 0.5,0.5,1,0.2 resectively to flows 1,2,3,4 is not max-min fair.

   (b) What is the max-min fair allocation for the depicted network?